Revise

Illustrate and name parts of circles

A circle is a 2D shape.

The perimeter of a circle is called the **circumference** (c).

The distance across the circle, passing through the centre, is called the **diameter** (d).

The distance from the centre of the circle to the circumference is called the **radius** (r).

The diameter of a circle is always twice the length of the radius:

$r \times 2 = d$

The radius of a circle is always half the length of the diameter:

$$\frac{d}{2} = r$$

The circumference of a circle is always approximately three times the length of the diameter:

$d \times 3.142 = c$

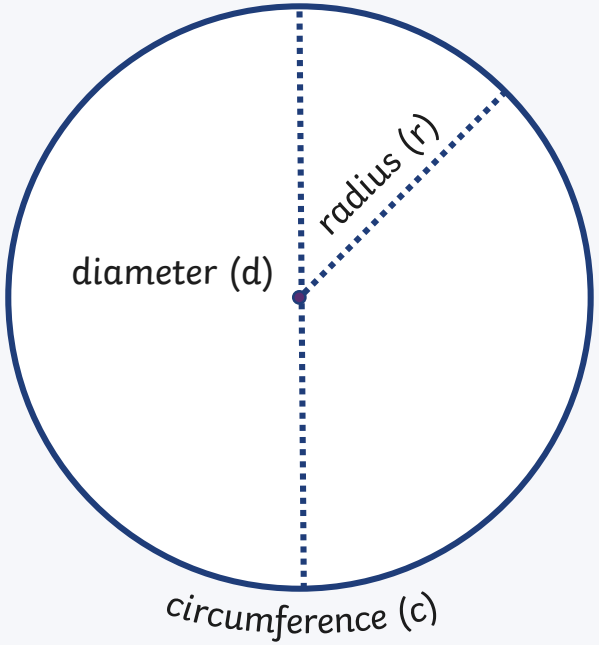

twinkl.com

Quiz

Illustrate and name parts of circles

What is the radius of the circle?

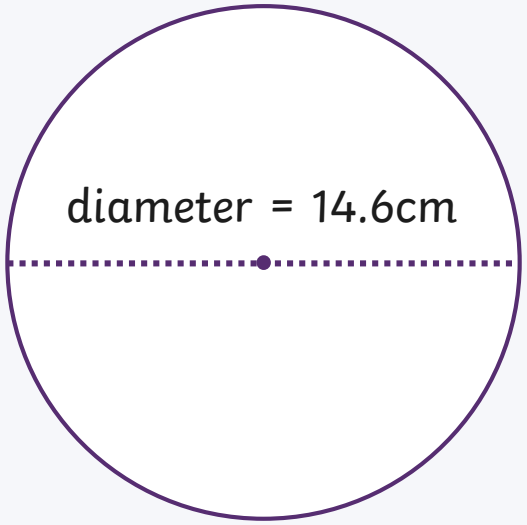

Not drawn to scale

7.3cm

7.4cm

7.2cm

Try again!

twinkl.com

Quiz

Illustrate and name parts of circles

What is the radius of the circle?

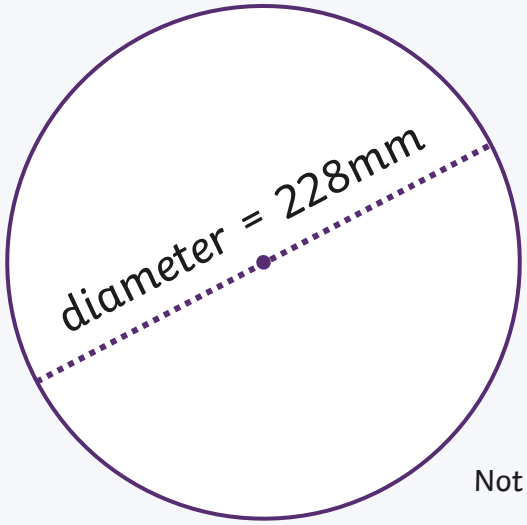

Not drawn to scale

114cm	11.4cm	1.14cm

Try again!

twinkl.com

Quiz

Illustrate and name parts of circles

What is the diameter of the circle?

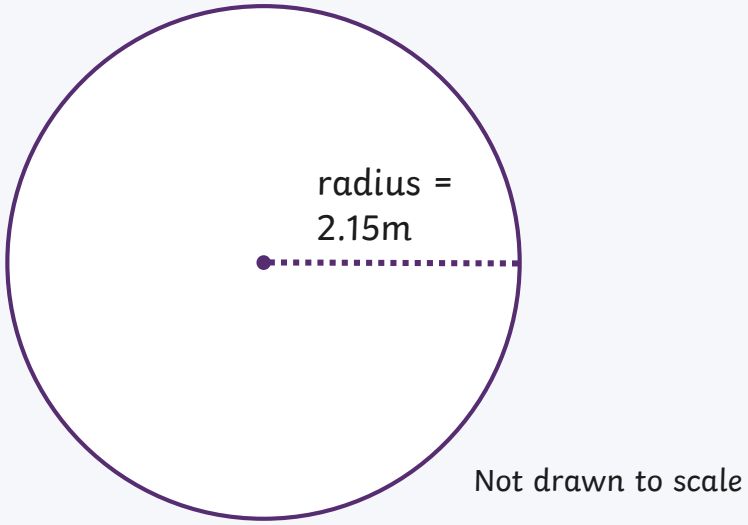

Not drawn to scale

4.3m	4.03cm	403cm

Correct!

twinkl.com

Quiz

Illustrate and name parts of circles

What is the diameter of the circle?

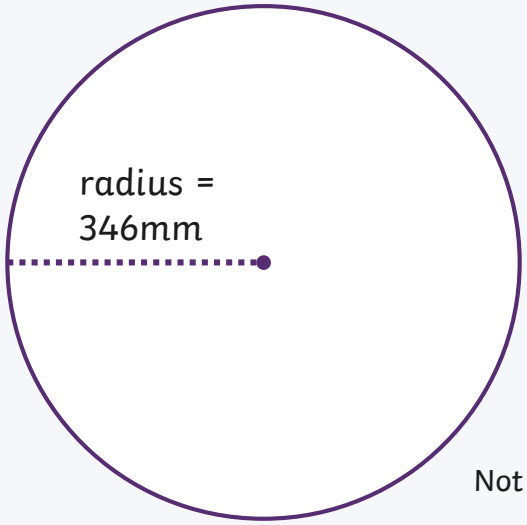

Not drawn to scale

629mm

62.9mm

69.2cm

Choose another objective

Try again!

twinkl.com

Revise

Recognise angles as a description of a turn

One whole turn clockwise or anti-clockwise is a complete rotation of 360°.
Therefore, a half turn is 180° and a quarter turn is 90°.

360°

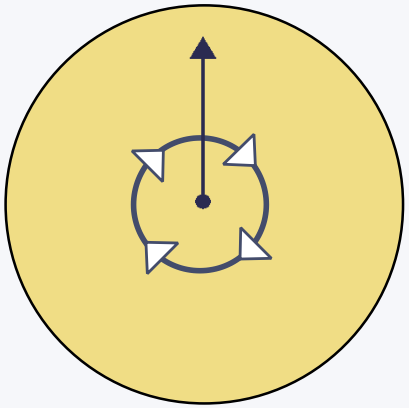

180°

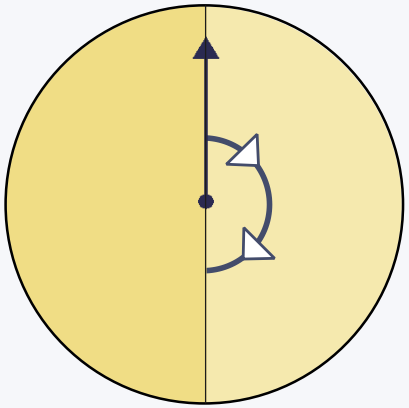

90°

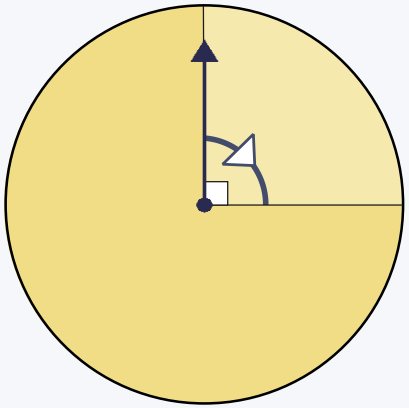

We can combine our understanding of angles with position and direction.

A clockwise turn from north to west is 270°.

twinkl.com

Quiz

Recognise angles as a description of a turn

If the arrow turns 90 degrees clockwise, where will it point to?

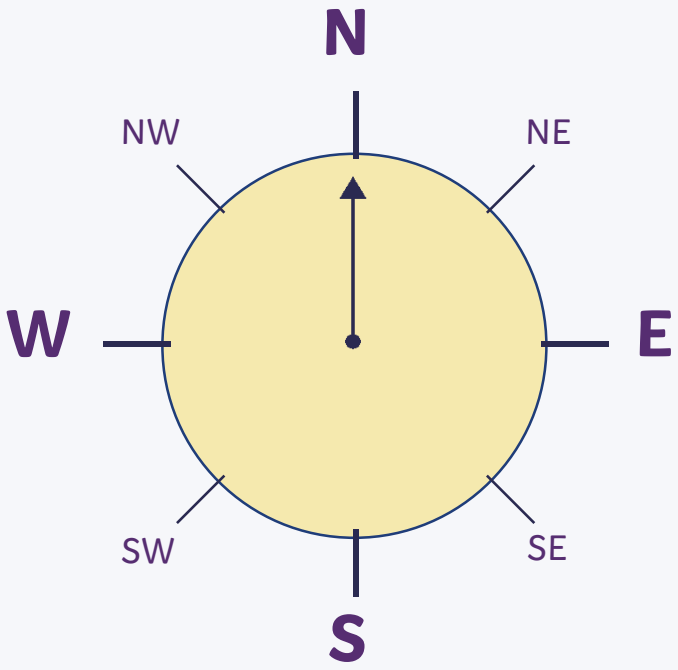

S

NE

E

Try again!

Correct!

twinkl.com

Quiz

Recognise angles as a description of a turn

If the arrow turns 45 degrees anti-clockwise, where will it point to?

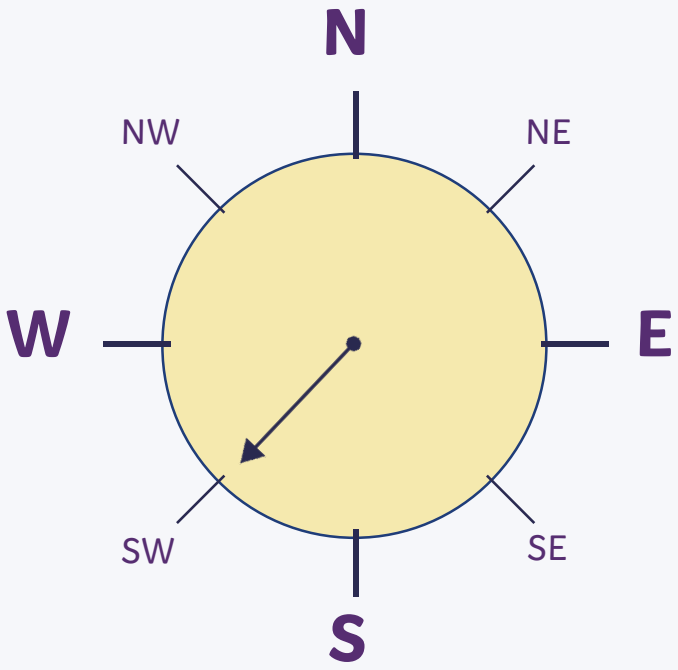

S

W

SE

Try again!

twinkl.com

Quiz

Recognise angles as a description of a turn

If the arrow turns 270 degrees anti-clockwise, where will it point to?

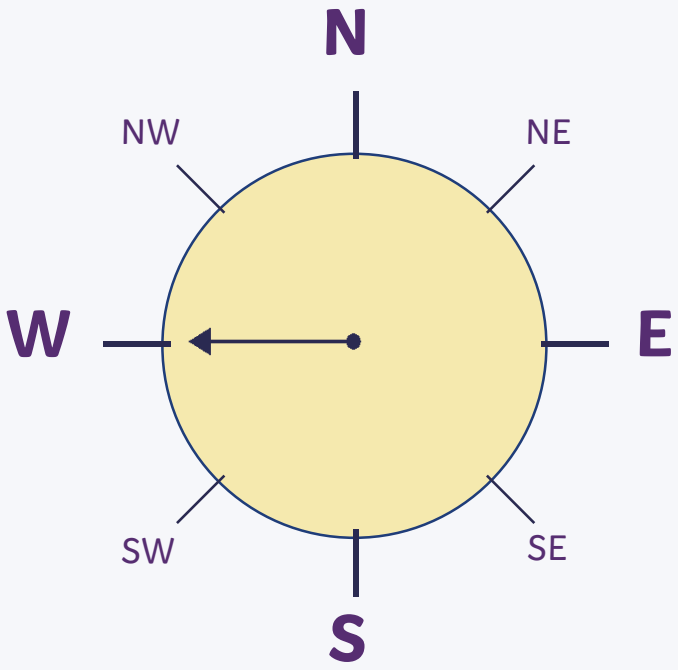

E

N

S

Try again!

twinkl.com

Quiz

Recognise angles as a description of a turn

If the arrow turns 225 degrees clockwise, which 3D shape will it point to?

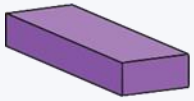

Square-based pyramid

Cube

Cuboid

Choose another objective

Try again!